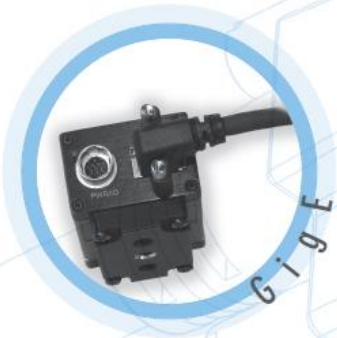

GIGABIT ETHERNET CABLES
FOR USE IN GigE VISION™ APPLICATIONS

PART NUMBER REFERENCE **M X-X-X-X-( )M**

Select Profile Type:

*Standard Dimension Type: 90 = V
*Extended Dimension Type: 110 = A

Select Connector Type: End "1" (See Pg. 2)

RJ45 Straight = 1
RJ45 VRT. w/Thumbscrews = 2
RJ45 HOR. w/Thumbscrews = 3
RJ45 Straight Industrial IP67 = 4
RJ45 R/A DOWN w/Clip = 5
RJ45 VRT. R/A DOWN w/Recessed Screws = 6
RJ45 HOR. R/A Up w/Thumbscrews = 7
RJ45 HOR. R/A Down w/Thumbscrews = 8
RJ45 VRT. RIGHT Exit w/Thumbscrews = 9
RJ45 VRT. LEFT Exit w/Thumbscrews = 10
RJ45 HOR. RIGHT EXIIT w/Recessed Screws = 11
RJ45 HOR. LEFT Exit w/Recessed Screws = 12
M12 X-Coded 10Gig Male = 13
M12 90° Angle –Coded 10 Gig Male = 14
M12 X-Coded 10Gig Female = 15
M12 90° Angle –Coded 10 Gig Female = 16
RJ45 Jack = 17
RJ45 Slim Line = 18
IX-10A Industrial Ethernet = 19

Cable Type Options: *

SSTP (CAT 6) = 1
Industrial (CAT 5e) = 2
Extended Distance (CAT 6) = 3
C-Track Cable (CAT 5e) = 4
Robotic (CAT 5e) = 5
10 GIG Robotic (CAT 6a) = 6
Industrial (CAT 6a) = 7
Ind. HiFlex (CAT 5e) = 8

Select Connector Type: End "2"

RJ45 Straight = 1
RJ45 VRT. w/Thumbscrews = 2
RJ45 HOR. w/Thumbscrews = 3
RJ45 Straight Industrial IP67 = 4
RJ45 R/A DOWN w/Clip = 5
RJ45 VRT. R/A DOWN w/Recessed Screws = 6
HOR. R/A Up w/Thumbscrews = 7
HOR. R/A Down w/Thumbscrews = 8
RJ45 VRT. RIGHT Exit w/Thumbscrews = 9
RJ45 VRT. LEFT Exit w/Thumbscrews = 10
RJ45 HOR. RIGHT EXIIT w/Recessed Screws = 11
RJ45 HOR. LEFT Exit w/Recessed Screws = 12
M12 X-Coded 10Gig Male = 13
M12 90° Angle –Coded 10 Gig Male = 14
M12 X-Coded 10Gig Female = 15
M12 90° Angle –Coded 10 Gig Female = 16
RJ45 Jack = 17
RJ45 Slim Line = 18
IX-10A Industrial Ethernet = 19

Length in Meters: 1 – 100*

NOTES:

*Cable type #: 3 is suitable up to 100 meters, all other cable types are suitable up to 60 meters in length.

*Connectors #: 5-12 & 17-19, are not compatible with cable types #: 7 & 8.

*Connector type #: 19 is only suitable with cable type #: 2.

PHYSICAL:

- Cable Color: Black, Violet or Teal
- Shell Color: Black
- Shell Construction: Where applicable -Pre-molded in Polyethylene and over-molded in black PVC.
- Fully shielded.
- Cable Construction: Meets EIA/TIA standards, category performance certified.

Temp: 6-9-21

CONNECTOR TYPES:

1

RJ45 Straight

2

RJ45 Vertical
W. Thumbscrews

3

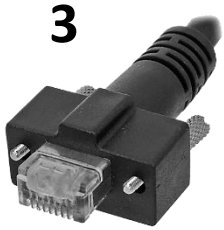

RJ45 Horizontal
W. Thumbscrews

4

RJ45 Straight
IP67 Industrial

5

RJ45 Vertical
W. Thumbscrews

6

RJ45 Vertical R/A
Down W. Screws

7

RJ45 Horizontal Right
Exit W. Thumbscrews

8

RJ45 Horizontal Right
Exit W. Thumbscrews

9

RJ45 Vertical Right
Exit W. Thumbscrews

10

RJ45 Vertical Left
Exit W. Thumbscrews

11

RJ45 Horizontal
Right Exit W. Screws

12

RJ45 Horizontal
Left Exit W. Screws

13

M12 X-Coded
Male Straight

14

M12 90° R/A
X-Coded Male

15

M12 X-Coded
Female Straight

16

M12 90° R/A
X-Coded Female

17

M12 90° R/A
X-Coded Female

18

RJ45 Slim Line

19

IX-10A
Industrial Ethernet

Temp: 6-9-21

TYPE 90

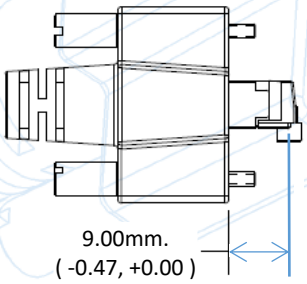

TYPE 110

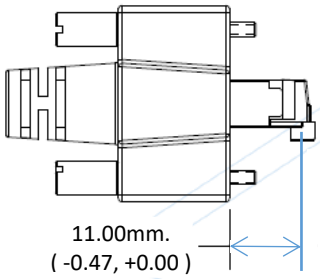

Standard Dimension Type: 90 = V
Extended Dimension Type: 110 = A

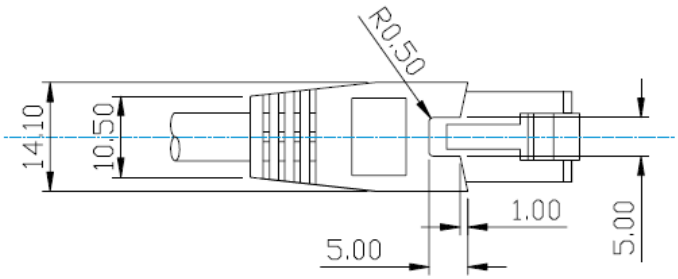

PROFILE 1

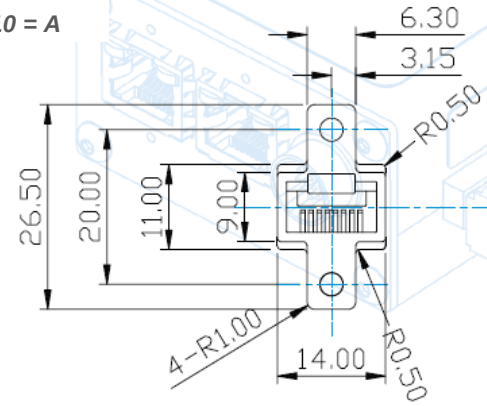

PROFILE 2

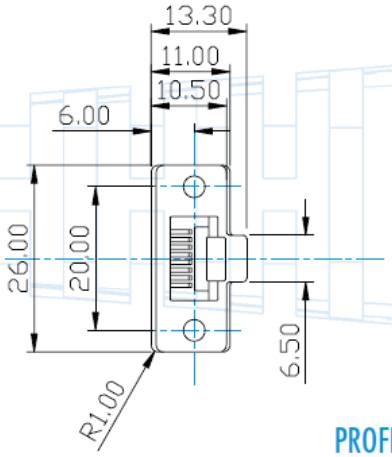

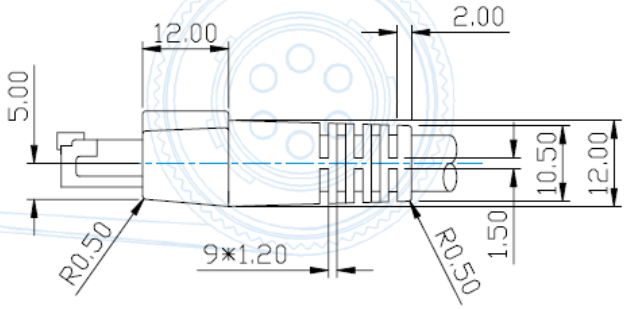

PROFILE 3

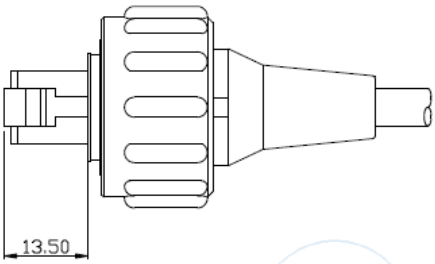

PROFILE 4

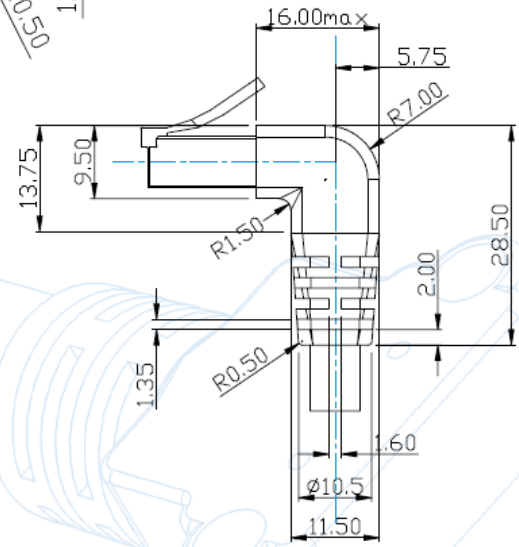

PROFILE 5

Temp: 6-9-21

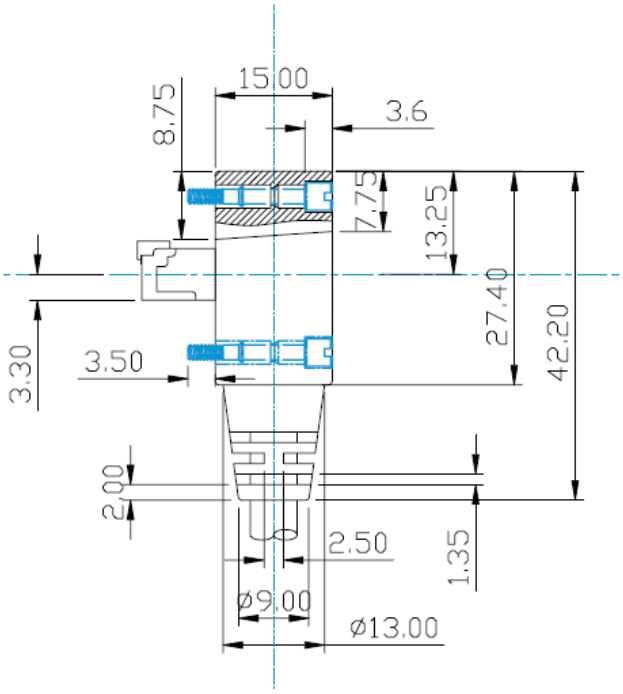

PROFILE 6

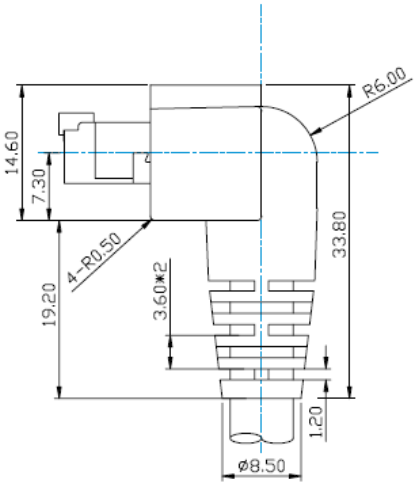

PROFILE 7 & 8

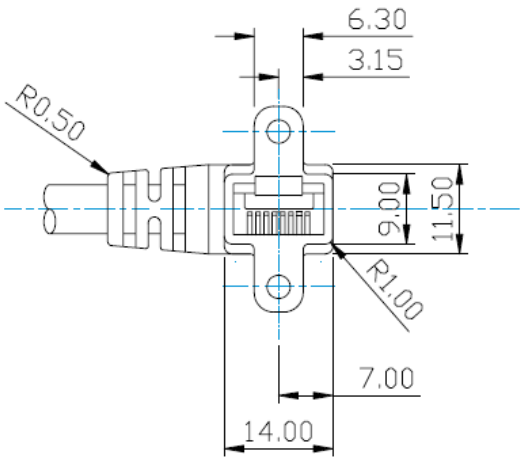

PROFILE 9 & 10

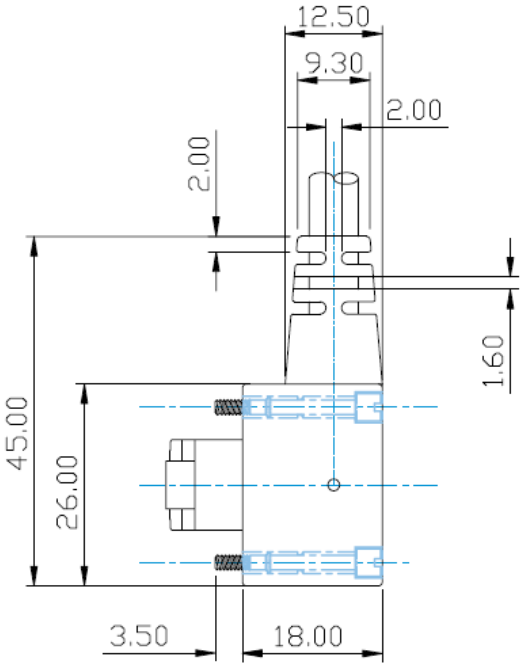

PROFILE 11 & 12

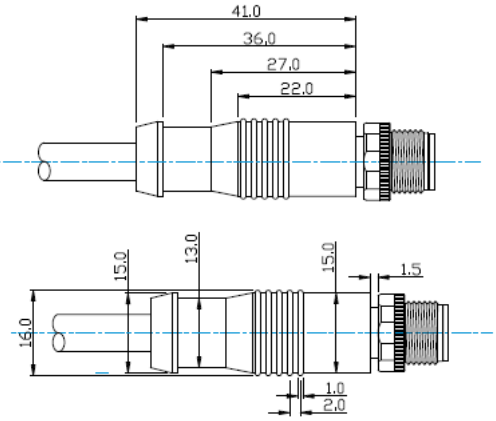

PROFILE 13 & 15

Additional Dimensional Information:

For additional information regarding the physical dimensions of our connector profiles, please visit our Web-Site: www.ComponentsExpress.com or ask one our sales associates and we will be happy to assist.

Temp: 6-9-21

MV Type #: 1 & MI Type #: 5

CROSS SECTION

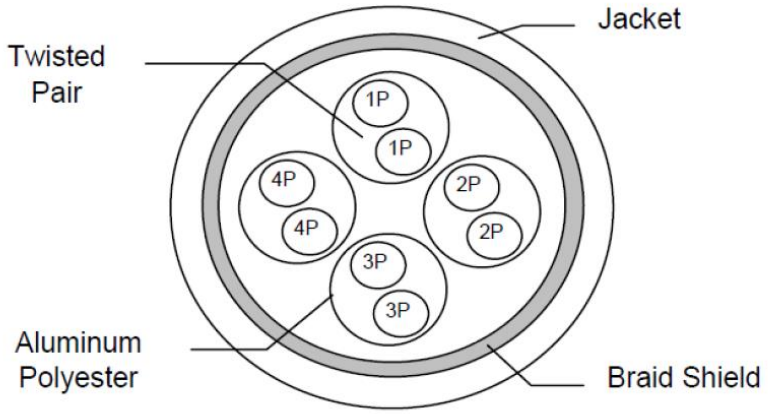

COLOR CODE

P1: Blue & White

P2: Orange & White

P3: Green & White

P4: Brown & White

DESCRIPTION

Rated Temperature: (C°)	75
Product Standard Certification:	CM
Flame Test:	FT4
Reference Standard:	UL 444, & the customer's specification

Typical Application:
Telephone and other communication circuits such as voice, data and audio for on-premise customer systems.

PERFORMANCE

Electrical Characteristics: (20°C)

Max. Conductor DC Resistance (Ω /km)	142
Min. Insulation Resistance (Ω/km)	100
Dielectric Strength:	AC-500V/1 Min.

CONSTRUCTION

Conductor:	Stranded Bare Copper
4 Twisted Pair	8C
AWG	26
Construction (mm)	7/0.16
Stranded Dia. (mm)	0.50
Insulation:	Skin-Foam-Skin-PE
Non. Thickness (mm)	0.26
Insulation Dia. (±0.05mm)	1.03
Shield:	Natural Aluminum / Polyester
Coverage (%)	≦ 125%
Braid Shield:	Tinned Copper
Construction (mm)	16/5/0.10T
Coverage (%)	≦ 55%
Jacket:	Polyvinyl Chloride (PVC)
Nom. Thickness (mm)	0.58
Outer Dia. (+0.2mm)	6.2

MECHANICAL CHARACTERISTICS

Test Object	Jacket
Test Material	PVC
Before Tensile Strength (kg/mm2²)	≦ 1.4
Aging Elongation (%)	≦ 100
Aging Condition	100±2°Cx240 Hrs.
After Tensile Strength:	≧85% of original
Aging Elongation:	≧50% of original

COMPONENTS EXPRESS, INC.
10330 Argonne Woods Drive, Ste100
Woodridge, IL 60517

Spec No.	50255-C
Revision	C
Date	6/13/2011

MINIMUM BEND RADIUS: 10X O.D.

8/8/19

MV Type #: 2 & MI Type #: 9

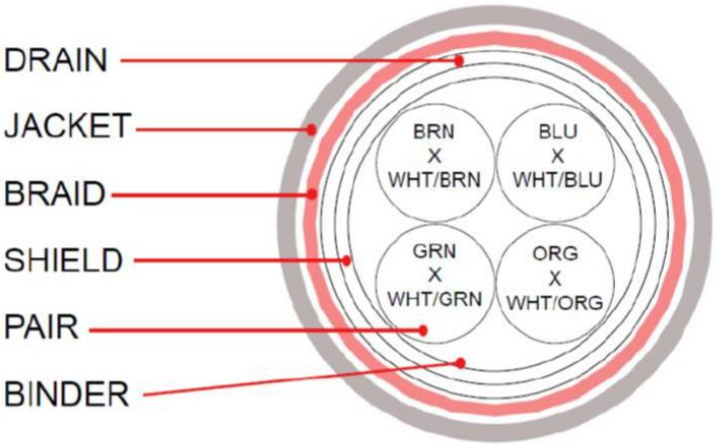

COLOR CODE

1. BLUE X WHITE / BLUE
2. ORANGE X WHITE / ORANGE
3. GREEN X WHITE / GREEN
4. BROWN X WHITE / BROWN

PHYSICAL PROPERTIES

TEMPERATURE RATING, MAX. 75°C (JACKET 105°C)
TEMPERATURE RATING, MIN.: -40°C

JACKET IS RESISTANT TO:
UV, WELD SPLATTER, MACHINE/CUTTING OIL

CONSTRUCTION

CONDUCTOR: 26 AWG 7/34 STRANDED TINNED COPPER

INSULATION: POLYOLEFIN, .010" NOM. WALL THICKNESS

PAIRS: COLOR CODED SINGLES TWISTED INTO PAIRS

CABLE: (4) TWISTED PAIRS TWISTED TOGETHER AND WRAPED WITH A CLEAR POLYESTER BINDER TO FORM A CABLE CORE.

SHIELDS: AN OVERALL ALUMINIZED POLYESTER FOIL SHIELD (FOIL OUT, 100% COVERAGE) SHALL BE APPLIED OVER THE THE CABLE CORE AND SHALL CONTAIN A 26 AWG 7/34 STRANDED TINNED COPPER DRAIN WIRE IN CONTACT WITH THE METALIZED SURFACE. A SECOND SHIELD OF 38 AWG TINNED COPPER BRAID (85% MINIMUM COVERAGE), SHALL BE APPLIED OVER THE FOIL SHIELD.

JACKET: THERMOPLASTIC ELASTOMER, BLACK, .032" NOM. WALL THICKNESS (PRESURE) OVERALL CABLE DIAMETER .245"

ELECTRICAL CHARACTERISTICS

100m OF CABLE

CAPACITANCE, MUTUAL 13.5 PF/FT. AT 1 MHz
DIELECTRIC WITHSTANDING, MIN 1500V RMS
VOLTAGE RATING, MAX. 300V
D.C. RESISTANCE, MAX. 42.6 Ω/1000'
IMPEDANCE 100 ±15 Ω1 -100 MHz

RETURN LOSS
1 ≤f<10 MHz20 + 5LOG (f) dB MIN
10 ≤f<20 MHz25 dB MIN
20 ≤f≤100 MHz25 -8.6LOG(f/20) dB MIN

MINIMUM BEND RADIUS: 10X O.D.

COMPONENTS EXPRESS, INC.
10330 Argonne Woods Drive, Ste100
Woodridge, IL 60517

Spec No. CABLE TYPE #2, INDUSTRIAL HIFLEX TIC-TOC (CAT-5E)

Revision: 4

Date: **8/8/19**

PRODUCT SPECFICATION: EXTENDED DISTANCE CABLE TYPE #: 3

CABLE SPECIFICATIONS

DESCRIPTION 23 AWG Solid 4 Pair Shielded Twisted Pair High Performance Cable

CONDUCTOR 23 AWG Solid Annealed Bare Copper

INSULATION Polyethylene

COLOR CODE Blue - White/Blue
Orange - White/Orange
Green - White/Green
Brown - White/Brown

SHIELD AI Foil Shield

JACKET Flame Retardant PVC

JACKET COLOR Blue Jacket

MARKING CATEGORY 6E 550MHZ 23AWG 4 PR FTP XXXXXXX CMR C(ETL)US FT4
ETL LISTED & VERIFIED
TO TIA-568-C.2

OVERALL DIAMETER 0.299' OD Nom.

CABLE WEIGHT 42 lbs./mft. Nom.

CAPACITANCE 330pF/100m

IMPEDANCE 100 +/- 15 Ohms

DC RESISTANCE 9.38 Ohms/100m

TEMPERATURE RATING Installation: 0 °C to 60 °C
Operating: -20 °C to 75 °C

INDUSTRY STANDARDS

AGENCY APPROVALS ETL Listed CMR Type FTP
C(ETL) Listed FT4 FTP
ETL Verified to TIA-568-C.2 and ISO/IEC 11801
RoHS Compliant

MINIMUM BEND RADIUS: 10X O.D.

Components Express, Inc.

Revision: D
Date: 10/12/20

MV Type #: 4 & MI Type #: 8

SHIELDED, OIL RESISTANT, UV-RESISTANT, FLAME RETARDANT, ABRASION RESISTANT

COLOR CODE

1. BLUE & WHITE/BLUE
2. ORANGE & WHITE/ORANGE
3. GREEN & WHITE/GREEN
4. BROWN & WHITE/BROWN

PHYSICAL PROPERTIES

TEMPERATURE RANGE -30°C TO +80°C

WEIGHT LBS/MFT 60 LBS.

RoHS COMPLIANT MATERIALS 2002/95/EC

MIN BEND RADIUS: 12 X OUTER DIAMETER

CONSTRUCTION

CONDUCTOR: 26 AWG FINELY STRANDED BAR COPPER WIRES

INSULATION: FOAM POLYETHYLENE

PAIRS: COLOR CODED, 4 PAIRS TWISTED TOGETHER

CABLE: (4) TWISTED PAIRS TWISTED TOGETHER TO FORM A CABLE CORE.

OUTER JACKET: HALOGEN-FREE, LOW ADHESION BLEND, OUTSIDE DIAMETER .3", COLOR: VIOLET

INNER JACKET: LOW-ADHESION PVC, GUSSET FILLED PRESSURE EXTRUDED

SHIELD: HIGHLY FLEXIBLE TINNED COPPER, 90% OPTICAL COVERAGE

MINIMUM BEND RADIUS: 10X O.D.

ELECTRICAL CHARACTERISTICS

CAPACITANCE, MUTUAL: 19PF/FT

REGULATIONS: UL AMW: 80°C 300V, CSA AWM: I/II A/B 80°C 300V FT1, CE: IN ACCORDANCE WITH EUROPEAN COUNCIL DIRECTIVE 73/23/EEC, RoHS: 202/95/EC

DIFFERENTIAL IMPEDANCE: 100 OHMS

INSERTION LOSS: MEETS EIA/TIA 568-B.2 FOR CAT5e STRANDED CONDUCTORS

COMPONENTS EXPRESS, INC.
Ph: 800-578-6695
www.ComponentsExpress.com

Spec No. **C-TRACK CABLE TYPE #4**
Revision A
Date **9/06/2011** Updated: 8/8/19

MV Type #: 5 & MI Type #: 7

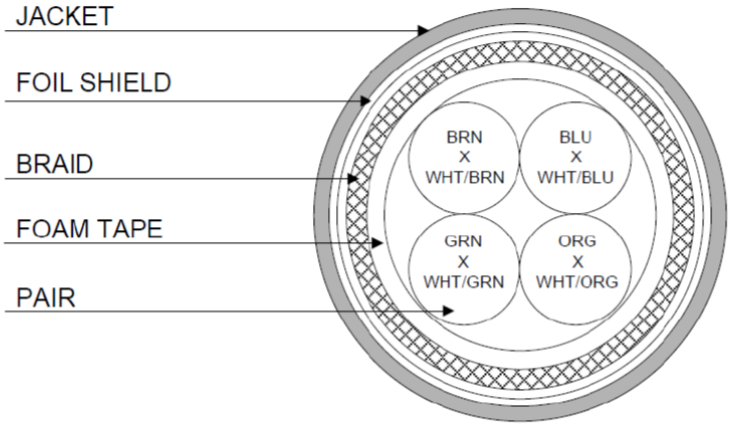

COLOR CODE

1. BLUE X WHITE/BLUE
2. ORANGE X WHITE/ORANGE
3. GREEN X WHITE/GREEN
4. BROWN X WHITE/BROWN

PHYSICAL PROPERTIES

TEMPERATURE RATING, MAX.75°C
TEMPERATURE RATING, MIN.-20°C
WT./M', NOM., NET.35.6 LBS.
JACKET IS WELD SPATTER RESISTANT

CONSTRUCTION

CONSTRUCTION:		NOM. DIA.
CONDUCTOR:	26 AWG 7/34 STRANDED TINNED COPPER	.019"
INSULATION:	HIGH DENSITY POLYETHYLENE, .009"NOM. WALL THICKNESS	.037"
PAIRS:	COLOR CODED SINGLES TWISTED INTO PAIRS	.074"
CABLE:	(4) TWISTED PAIRS TWISTED TOGETHER AND WRAPPED WITH A FOAM POLYPROPYLENE TAPE TO FORM A CABLE CORE.	
SHIELDS:	AN OVERALL SHIELD OF 38 AWG TINNED COPPER BRAID (75% MINIMUM COVERAGE),SHALL BE APPLIED OVER THE CABLE CORE. A SECOND SHIELD OF ALUMINIZEDPOLYESTER FOIL (FOIL IN, 100% COVERAGE) SHALL BE APPLIED OVER THE BRAID.	.143”
JACKET:	THERMOPLASTIC ELASTOMER, **(BLACK OR VIOLET)**, .037" NOM. WALL THICKNESS (PRESSURE) OVERALL CABLE DIAMETER	.245" ± .005"

FLEX & TORSION TESTING

MINIMUM BEND RADIUS: 10X O.D.

FLEX LIFE (126 CYCLES/MIN)	1 MILLION CYCLE TEST (10X CABLE O.D., MINIMUM RADIUS) 10 MILLION CYCLE TEST (20X CABLE O.D., MINIMUM RADIUS)
TORSION TEST (1 LB LOAD, 360°, 71 CYCLES/MIN)	3 MILLIION CYCLE TEST
JACKET CUTTING/MACHING OIL RESISTANCE (6 MONTHS @ 20° C)	
TENSILE STRENGTH RETENTION, NOM.	80%
ELONGATION RETENTION, NOM.	100%

POE COMPLIANT (802.3af) TO 80 METERS WHEN INSTALLED PER RECOMMENDATIONS IN TIA TSB-184

ELECTRICAL CHARACTERISTICS SEE PAGE 2

COMPONENTS EXPRESS, INC.
10330 Argonne Woods Drive, Ste100
Woodridge, IL 60517

PRODUCT SPECIFICATION: **ROBOTIC CABLE TYPE #5 (CAT 5E)**

ELECTRICAL CHARACTERISTICS FOR 100m OF CABLE

CAPACITANCE, MUTUAL, NOM.	13.5 PF/FT. AT 1 MHz
DIELECTRIC WITHSTANDING, MIN.	1500V RMS
VOLTAGE RATING, MAX.	300V
D.C. RESISTANCE, MAX.	14.0 Ω
IMPEDANCE, NOM.	100 +/- 15 Ω 1-100 MHz
RETURN LOSS	1 - 10 MHz 20 + 6 LOG(f) dB MIN* 10 - 20 MHz 26 dB MIN* 20 - 100 MHz 26- 5 LOG(f/20) dB MIN*
NEXT	$1 \le f \le 100$ MHz 35.3 - 15 LOG(f/100) dB MIN
PSNEXT	$1 \le f \le 100$ MHz 32.3 - 15 LOG(f/100) dB MIN
ACRF	$1 \le f \le 100$ MHz 23.8 - 20 LOG(f/100) dB MIN
PSACRF	$1 \le f \le 100$ MHz 20.8 - 20 LOG(f/100) dB MIN
INSERTION LOSS	$1 \le f \le 100$ MHz 1.5[1.967 $\sqrt{f}$ + 0.023(f) + 0.050/$\sqrt{f}$] dB MAX
DELAY	$1 \le f \le 100$ MHz 534 + 36/$\sqrt{f}$ ns MAX
DELAY SKEW	$1 \le f \le 100$ MHz <25ns
COUPLING ATTENUATION	$30 \le f \le 100$ MHz 50 dB MINIMUM
PER IEC 62153-4-9	
VELOCITY OF PROPAGATION	68%

NOTE: ALL TESTING IS CONDUCTED OFF THE REEL.

COMPONENTS EXPRESS, INC.
10330 Argonne Woods Drive, Ste100
Woodridge, IL 60517

Spec No. **ROBOTIC CABLE TYPE #5 (CAT 5E)**
Revision **7**
Date **8/8/19**

MV Type #: 6 & MI Type #: 6

1) CONSTRUCTION:		NOM. DIA.
CONDUCTOR:	26 AWG 7/34 STRANDED TINNED COPPER	.019"
INSULATION:	HIGH DENSITY POLYETHYLENE, .009" NOM. WALL THICKNESS	.036"
PAIRS:	COLOR CODED SINGLES TWISTED INTO PAIRS	.072"
CABLE:	(4) TWISTED PAIRS TWISTED TOGETHER WITH A CENTRAL SPLINE AND WRAPPED WITH A FOAM POLYPROPYLENE TAPE TO FORM A CABLE CORE.	.176"
SHIELDS:	AN OVERALL SHIELD OF 38 AWG TINNED COPPER BRAID (80% MINIMUM COVERAGE) SHALL BE APPLIED OVER THE CABLE CORE. AN ALUMINIZED POLYESTER FOIL SHIELD (FOIL IN, 100% COVERAGE) SHALL BE APPLIED OVER THE BRAID SHIELD.	.195"
JACKET:	THERMOPLASTIC ELASTOMER, TEAL, .040" NOM. WALL THICKNESS	
	OVERALL CABLE DIAMETER	.275" NOM. (± .010") (BY PI TAPE)

2) PHYSICAL PROPERTIES:

TEMPERATURE RATING, MAX.	75ºC
TEMPERATURE RATING, MIN.	-20ºC
WT./M', NOM., NET.	**41.5 LBS.**
JACKET IS WELD SPATTER RESISTANT	
JACKET IS SUNLIGHT RESISTANT	
FLEX LIFE (PENDING)	
(126 CYCLES/MIN)	1 MILLION CYCLE TEST (10X CABLE O.D., MINIMUM RADIUS)
	10 MILLION CYCLE TEST (20X CABLE O.D., MINIMUM RADIUS)
TORSION TEST (PENDING)	
(1 LB LOAD, 360°, 71 CYCLES/MIN)	3 MILLION CYCLE TEST
JACKET CUTTING/MACHINING OIL RESISTANCE	
(6 MONTHS @ 20°C)	
TENSILE STRENGTH RETENTION, NOM.	80%
ELONGATION RETENTION, NOM.	100%

3) ELECTRICAL CHARACTERISTICS:

SEE PAGE 2

4) AGENCY APPROVALS:

NEC (UL) TYPE CMX OUTDOOR - CM
CEC C(UL) TYPE CMX OUTDOOR - CM

5) APPLICATION:

SHIELDED FLEXIBLE PATCH/JUMPER CABLE TO SUPPORT SCREENED 568-C.2 CATEGORY 6a APPLICATIONS.
RoHS COMPLIANT MATERIALS.

COLOR CODE:

1. BLUE X WHITE/BLUE
2. ORANGE X WHITE/ORANGE
3. GREEN X WHITE/GREEN
4. BROWN X WHITE/BROWN

MINIMUM BEND RADIUS: 10X O.D.

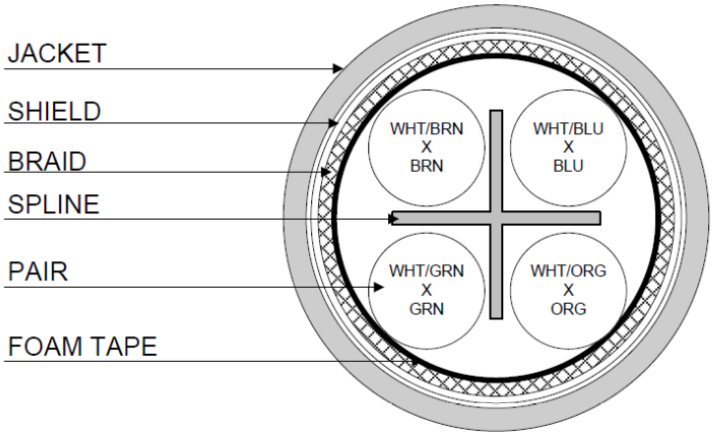

COMPONENTS EXPRESS, INC.
10330 Argonne Woods Drive, Ste100
Woodridge, IL 60517

Rev. 6

Date: 8/8/19

MV Type #: 6 & MI Type #: 6

3) ELECTRICAL CHARACTERISTICS: (FOR 100m OF CABLE)

CAPACITANCE, MUTUAL	13.5 PF/FT. AT 1 MHZ		
DIELECTRIC WITHSTANDING, MIN	1500V RMS		
VOLTAGE RATING, MAX.	300V		
D.C. RESISTANCE, MAX.	14.0 Ω		
IMPEDANCE, NOM.	100 ± 15 Ω 1 - 100 MHz 100 ± 20 Ω 100 - 500 MHz		
RETURN LOSS	$1 \le f < 10$ MHz 20 + 6 LOG(f) dB MIN* $10 \le f < 20$ MHz26 dB MIN* $20 \le f \le 100$ MHz26 -5 LOG(f/20) dB MIN* $100 < f \le 250$ MHz25 -8.6 LOG(f/20) dB MIN		
PS NEXT	1 - 500 MHz	42.3 - 15 LOG (F/100) dB MIN	
NEXT	1 - 500 MHz	44.3 - 15 LOG (F/100) dB MIN	
PS ACRF	1 - 500 MHz	24.8 - 20 LOG(F/100) dB MIN	
ACRF	1 - 500 MHz	27.8 - 20 LOG(F/100) dB MIN	
ATTENUATION	1 - 500 MHz	1.5[1.82 SQRT(F) +.0091(F) +.25/SQRT(F)] dB MAX	
DELAY	1 - 500 MHz	534 + 36/SQRT(F)	
DELAY SKEW	1 - 500 MHz	<45 ns	
PS ANEXT LOSS (6 AROUND 1)	1 - 500 MHz	62.5 - 15 LOG (F/100) dB 67 dB	50 - 500 MHz 1 - 50 MHz
PS AFEXT (6 AROUND 1)	1 - 500 MHz	38.2 - 20 LOG(F/100) dB	
VELOCITY OF PROPAGATION	68%		

NOTE: ALL TESTING IS CONDUCTED OFF THE REEL.

COMPONENTS EXPRESS, INC.
10330 Argonne Woods Drive, Ste100
Woodridge, IL 60517

Rev. 6

Date: 8/8/19

MV Type #: 7

1) CONSTRUCTION: NOM. DIA.
CONDUCTOR: 24 AWG 7/32 STRANDED TINNED COPPER .0236"
INSULATION: HIGH DENSITY POLYETHYLENE, .011" NOM. WALL THICKNESS .046"
PAIRS: COLOR CODED SINGLES TWISTED INTO PAIRS .092"
CABLE: 4 TWISTED PAIRS TWISTED TOGETHER WITH A CENTRAL SPLINE AND WRAPPED WITH A FOAM POLYPROPYLENE TAPE TO FORM A CABLE CORE. .228"
SHIELDS: AN OVERALL SHIELD OF 38 AWG TINNED COPPER BRAID (75% MINIMUM COVERAGE), SHALL BE APPLIED OVER THE CABLE CORE. A SECOND SHIELD OF ALUMINIZED POLYESTER FOIL (FOIL IN, 100% COVERAGE) SHALL BE APPLIED OVER THE BRAID. .247"
JACKET: THERMOPLASTIC ELASTOMER, COLOR BLACK, .039" NOM. WALL THICKNESS
(PRESSURE) OVERALL CABLE DIAMETER .325" ± .010" (BY PI TAPE)

2) PHYSICAL PROPERTIES:

TEMPERATURE RATING, MAX.	75°C & 80°C
TEMPERATURE RATING, MIN.	-20°C (PER UL 444 COLD BEND)
TEMPERATURE RATING, MIN.	-40°C (MANUFACTURER'S RECOMMENDED)
WT./M', NOM., NET.	51.2 LBS.
JACKET IS SUNLIGHT RESISTANT	
JACKET IS WELD SPATTER RESISTANT	
JACKET IS CUTTING/MACHINING OIL RESISTANT	(6 MONTHS @ 20°C)
TENSILE STRENGTH RETENTION, NOM.	80%
ELONGATION RETENTION, NOM.	100%
FLEX LIFE (PENDING) (126 CYCLES/MIN, @ 20°C)	
TORSION TEST (PENDING) (1 LB LOAD, 360°, 71 CYCLES/MIN, @ 20°C)	3 MILLION CYCLE TEST

MINIMUM BEND RADIUS: 10X O.D.
1 MILLION CYCLE TEST (10X CABLE O.D., MINIMUM RADIUS)
10 MILLION CYCLE TEST (20X CABLE O.D., MINIMUM RADIUS)

3) ELECTRICAL CHARACTERISTICS: SEE PAGE 2

4) AGENCY APPROVALS:
NEC (UL) TYPE CMX OUTDOOR - CM
CEC C(UL) TYPE CMX OUTDOOR - CM

5) APPLICATION:
SHIELDED FLEXIBLE PATCH/JUMPER CABLE TO SUPPORT SCREENED INDUSTRIAL ETHERNET/IP TIA-568.2-D CAT6 & 6a

6) COLOR CODE:
1. WHITE/BLUE X BLUE
2. WHITE/ORANGE X ORANGE
3. WHITE/GREEN X GREE
4. WHITE/BROWN X BROWN

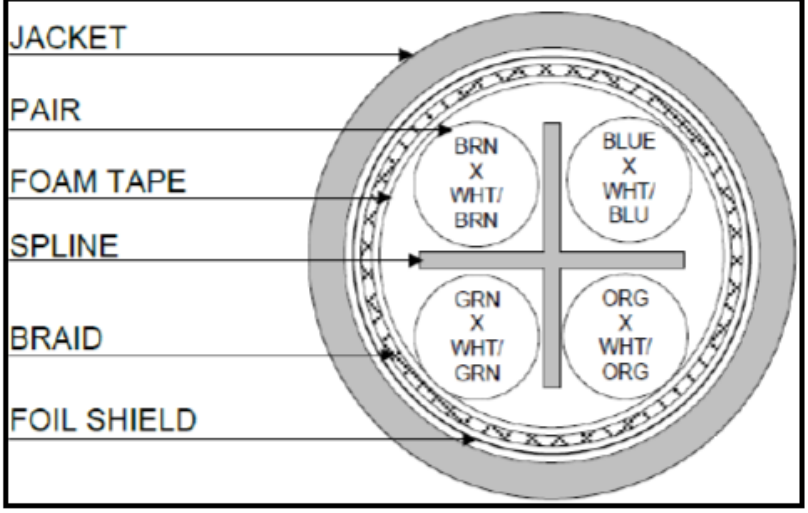

COMPONENTS EXPRESS, INC.
10330 Argonne Woods Drive, Ste100
Woodridge, IL 60517

Rev. 3, 4/8/19

MV Type #: 7

6) ELECTRICAL CHARACTERISTICS:

POE COMPLIANT TO 88 METERS WHEN INSTALLED PER RECOMMENDATIONS IN TIA TSB-184

CABLE WILL MEET CAT 6a CHANNEL REQUIREMENTS TO 88 METER LENGTH

CAPACITANCE, MUTUAL, NOM.	13.5 PF/FT. AT 1 MHz
DIELECTRIC WITHSTANDING, MIN.	2000V RMS
VOLTAGE RATING, MAX.	600V
D.C. RESISTANCE, MAX.	26.2 Ω/1,000'

NOTE: TESTING FOR THE FOLLOWING IS CONDUCTED OFF THE REEL. (FOR 100m OF CABLE)

IMPEDANCE, NOM.	100 ± 15 Ω 1 - 100 MHz	
	100 ± 20 Ω 100 - 500 MHz	
RETURN LOSS	1 ≤ f < 10 MHz	20 + 6 LOG(f) dB MIN*
	10 ≤ f < 20 MHz	26 dB MIN*
	20 ≤ f < 100 MHz	26 - 5 LOG(f/20) dB MIN*
	100 ≤ f ≤ 500 MHz	25 - 8.6 LOG(f/20) dB MIN
PS NEXT	1 ≤ f ≤ 500 MHz	42.3 - 15 LOG(f/100) dB MIN
NEXT	1 ≤ f ≤ 500 MHz	44.3 - 15 LOG(f/100) dB MIN
PSACRF	1 ≤ f ≤ 500 MHz	24.8 - 20 LOG(f/100) dB MIN
ACRF	1 ≤ f ≤ 500 MHz	27.8 - 20 LOG(f/100) dB MIN
INSERTION LOSS	1 ≤ f ≤ 500 MHz	1.2 [1.82√(f) + 0.0091(f) + 0.25/√(f)] dB MAX
DELAY	1 ≤ f ≤ 500 MHz	534 + 36/√(f) ns MAX
DELAY SKEW	1 ≤ f ≤ 500 MHz	<45 ns
PS NEXT LOSS (6 AROUND 1)	1 ≤ f ≤ 500 MHz	62.5 - 15 LOG (f/100) dB MIN 50 – 500 MHz
		67 dB MIN 1 - 50 MHz
PSAACRF	1 ≤ f ≤ 500 MHz	38.2 - 20 LOG(f/100) dB MIN
COUPLING ATTENUATION	30 ≤ f ≤ 250 MHz	100 - 20 LOG(f) (MAX 60 dB) E3*
VELOCITY OF PROPAGATION	68%	

COMPONENTS EXPRESS, INC.
10330 Argonne Woods Drive, Ste100
Woodridge, IL 60517

Rev. 3, 4/8/19

MV Type #: 8 & MI Type #: F

1) CONSTRUCTION: NOM. — DIA.

CONDUCTOR: 22 AWG 19/.0058 STRANDED TINNED COPPER	.0280"
INSULATION: HIGH DENSITY POLYETHYLENE, .014" NOM. WALL THICKNESS	.057"
PAIRS: COLOR CODED SINGLES TWISTED INTO PAIRS	.092"
CABLE: 4 TWISTED PAIRS TWISTED TOGETHER WITH A WRAPPED WITH A FOAM POLYPROPYLENE TAPE TO FORM A CABLE CORE.	.250"
SHIELDS: AN OVERALL SHIELD OF 38 AWG TINNED COPPER BRAID (75% MINIMUM COVERAGE), SHALL BE APPLIED OVER THE CABLE CORE. A SECOND SHIELD OF ALUMINIZED POLYESTER FOIL (FOIL IN, 100% COVERAGE) SHALL BE APPLIED OVER THE BRAID.	.272"
JACKET: THERMOPLASTIC ELASTOMER, COLOR TEAL, .041" NOM. WALL THICKNESS (PRESSURE) OVERALL CABLE DIAMETER	.354" ± .010" (BY PI TAPE)

2) PHYSICAL PROPERTIES:

TEMPERATURE RATING, MAX.	75°C & 80°C (JACKET 105°c, 75°C OIL)
TEMPERATURE RATING, MIN.	-40°C (MANUFACTURER'S RECOMMENDED)
WT./M', NOM., NET.	59.7 LBS.
JACKET IS SUNLIGHT RESISTANT	
JACKET IS WELD SPATTER RESISTANT	
JACKET IS CUTTING/MACHINING OIL RESISTANT (6 MONTHS @ 20°C)	
TENSILE STRENGTH RETENTION, NOM.	80%
ELONGATION RETENTION, NOM.	100%
FLEX LIFE (PENDING) (126 CYCLES/MIN, @ 20°C)	
TORSION TEST (PENDING) (1 LB LOAD, 360°, 71 CYCLES/MIN, @ 20°C)	3 MILLION CYCLE TEST

MINIMUM BEND RADIUS: 10X O.D.
1 MILLION CYCLE TEST (10X CABLE O.D., MINIMUM RADIUS)
10 MILLION CYCLE TEST (20X CABLE O.D., MINIMUM RADIUS)

3) ELECTRICAL CHARACTERISTICS: SEE PAGE 2

4) AGENCY APPROVALS:
UL AWM STYLE 2463 (80C 600V)
NEC (UL) TYPE PLTC & ITC
EU CE MARKS: MEETS EU DIRECTIVE 2011/65/EU (RoHS II)

5) APPLICATION:
RUGGED PATCH CABLE CAT 5e

6) COLOR CODE:
1. BLUE X WHITE/BLUE
2. ORANGE X WHITE/ORANGE
3. GREEN X WHITE/GREEN
4. BROWN X WHITE/BROWN

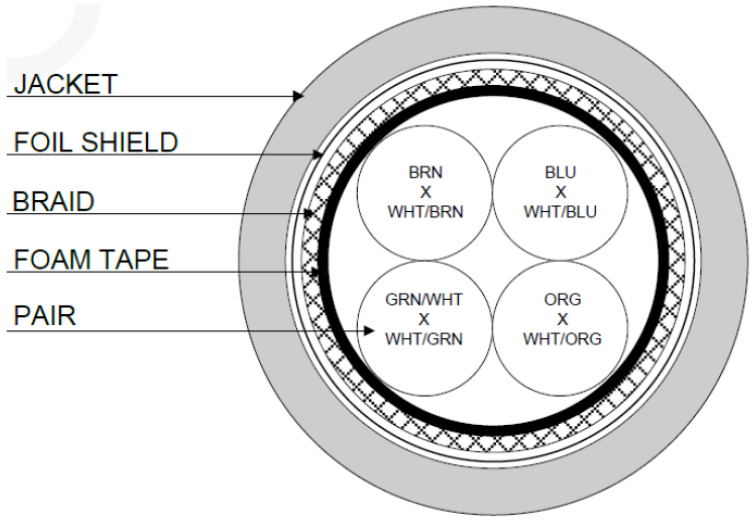

COMPONENTS EXPRESS, INC.
10330 Argonne Woods Drive, Ste100
Woodridge, IL 60517

Rev. 6, 10/18/19

MV Type #: 8 & MI Type #: F

6) ELECTRICAL CHARACTERISTICS:

POE COMPLIANT TO 100 METERS WHEN INSTALLED PER RECOMMENDATIONS IN TIA TSB-184

CABLE WILL MEET CAT 5e CHANNEL REQUIREMENTS TO 100 METER LENGTH

CAPACITANCE, MUTUAL, NOM.	13.5 PF/FT. AT 1 MHz
DIELECTRIC WITHSTANDING, MIN.	2000V RMS
VOLTAGE RATING, MAX.	600V
D.C. RESISTANCE, MAX.	15.9 Ω/1,000' @ 20°C

NOTE: TESTING FOR THE FOLLOWING IS CONDUCTED OFF THE REEL. (FOR 100m OF CABLE)

IMPEDANCE, NOM.	100 ± 15 Ω 1 - 100 MHz	
	100 ± 20 Ω 100 - 500 MHz	
RETURN LOSS	1 ≤ ƒ < 10 MHz	20 + 6 LOG(ƒ) dB MIN*
	10 ≤ ƒ < 20 MHz	26 dB MIN*
	20 ≤ ƒ < 100 MHz	26 - 5 LOG(ƒ/20) dB MIN*
PS NEXT	1 ≤ ƒ ≤ 100 MHz	32.3 - 15 LOG(ƒ/100) dB MIN
NEXT	1 ≤ ƒ ≤ 100 MHz	35.3 - 15 LOG(ƒ/100) dB MIN
PSACRF	1 ≤ ƒ ≤ 100 MHz	20.8 - 20 LOG(ƒ/100) dB MIN
ACRF	1 ≤ ƒ ≤ 100 MHz	23.8 - 20 LOG(ƒ/100) dB MIN
INSERTION LOSS	1 ≤ ƒ ≤ 100 MHz	1.02[1.967√(ƒ) + 0.023(ƒ) + 0.050/√(ƒ)] + 4*0.040√ƒ dB MAX
DELAY	1 ≤ ƒ ≤ 100 MHz	534 + 36/√(ƒ) ns MAX
DELAY SKEW	1 ≤ ƒ ≤ 100 MHz	
(ORG X WHT/ORG, GRN/WHT X WHT/GRN PAIRS)		≤ 20 ns Per IEC 61156-5
(BLU X WHT/BLU, BRN/WHT X WHT/BRN PAIRS)		< 45 ns
COUPLING ATTENUATION	30 ≤ ƒ ≤ 250 MHz	≤ 60 dB) E3*
VELOCITY OF PROPAGATION	69%	

COMPONENTS EXPRESS, INC.
10330 Argonne Woods Drive, Ste100
Woodridge, IL 60517

Rev. 6, 10/18/19